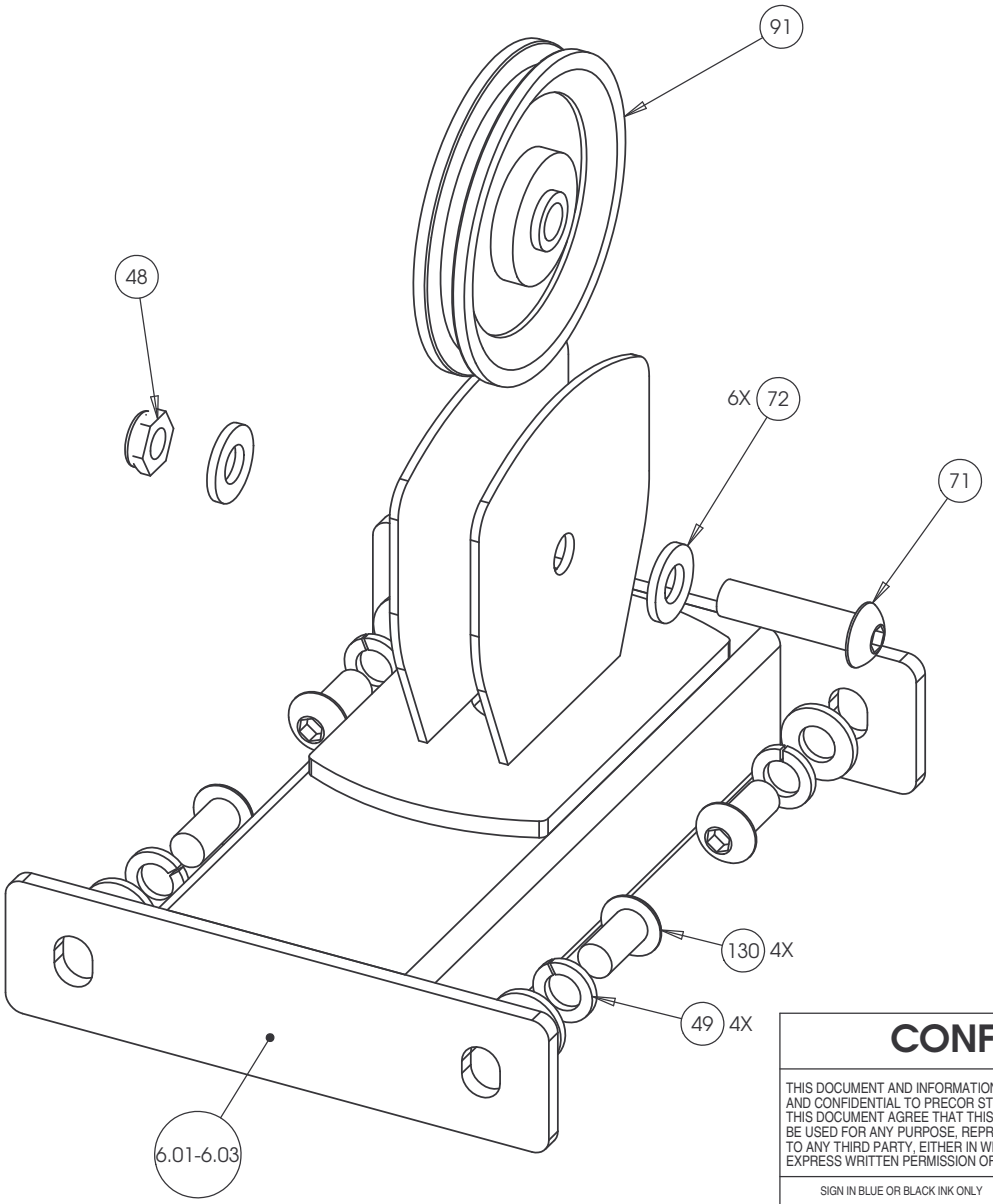

CONFIDENTIAL

THIS DOCUMENT AND INFORMATION CONTAINED HEREIN IS PROPRIETARY AND CONFIDENTIAL TO PRECOR STRENGTH INCORPORATED. RECIPIENTS OF THIS DOCUMENT AGREE THAT THIS DOCUMENT AND INFORMATION WILL NOT BE USED FOR ANY PURPOSE, REPRODUCED OR COPIED, OR DISCLOSED TO ANY THIRD PARTY, EITHER IN WHOLE OR IN PART WITHOUT PRIOR EXPRESS WRITTEN PERMISSION OF PRECOR STRENGTH, INCORPORATED.

SIGN IN BLUE OR BLACK INK ONLY		
DRWN BY	01.02.07	MGP
DWG CHK		
ENG	01.02.07	RSG
MFG ENG		
CS		
QA		
ID		
REG		

UNLESS OTHERWISE SPECIFIED:
DIMENSIONS ARE IN INCHES
TOLERANCES ARE:
LIN .X=±0.1 .XXX=±0.010
LIN .XX=±0.02 .XXXX=±0.0001
ANGULAR: ±1.0°
ALL DIMS AFTER PLATING
BREAK ALL SHARP EDGES
REMOVE ALL BURRS
ALL ANGLES & BENDS 90°
DWG PER ASME Y14.5M-1994
DO NOT SCALE DRAWING
ALL MACHINED SURFACES

PRECOR USA
PRECOR STRENGTH, INC.
28936 AVE WILLIAMS
VALENCIA, CA 91355
TELEPHONE: 661-362-0300

PRODUCT: STRENGTH

ASSEMBLY CONNECTION, 10.5, W/ 1 PULLEY HSG

SIZE	PAGE OF	DWG. NO.	SUBREV
C	1 1	CW31868-402	A

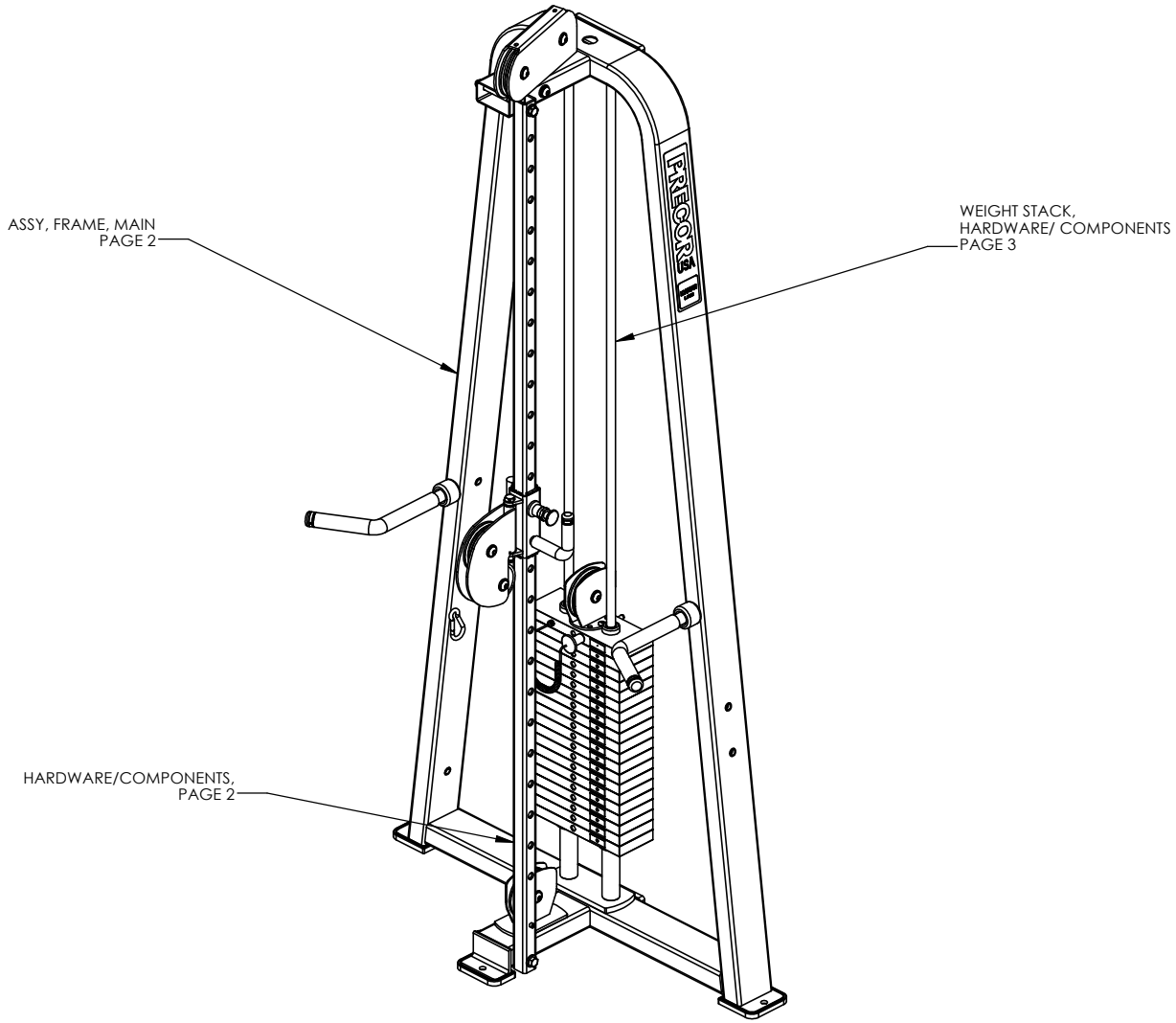

P/N: CW34920-401		SUBREV: A
DRAWN BY: VLE	DATE: 06.24.09	SHEET 1 OF 3

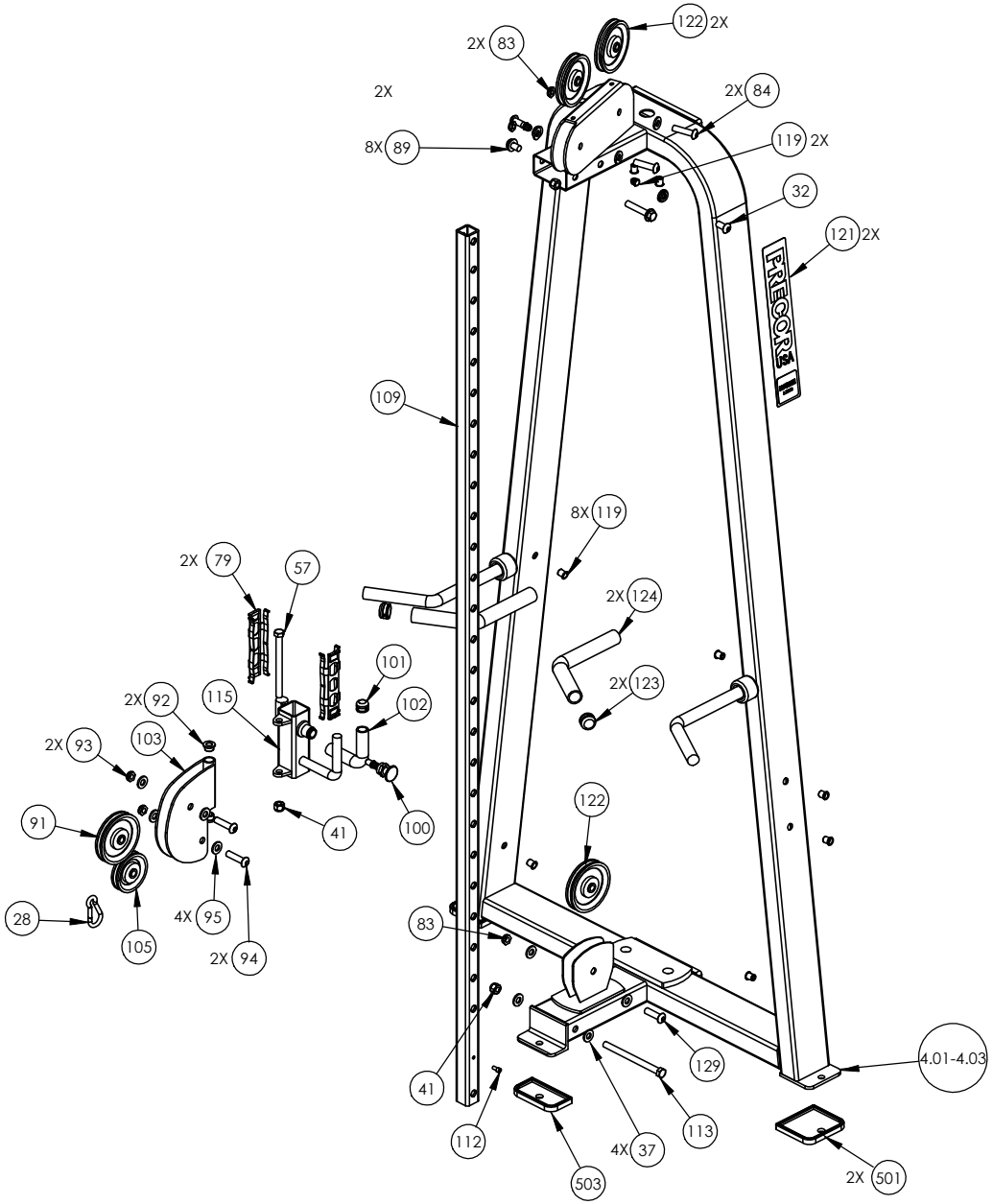

P/N: CW34920-401		SUBREV: A
DRAWN BY: VLE	DATE: 06.24.09	SHEET 2 OF 3

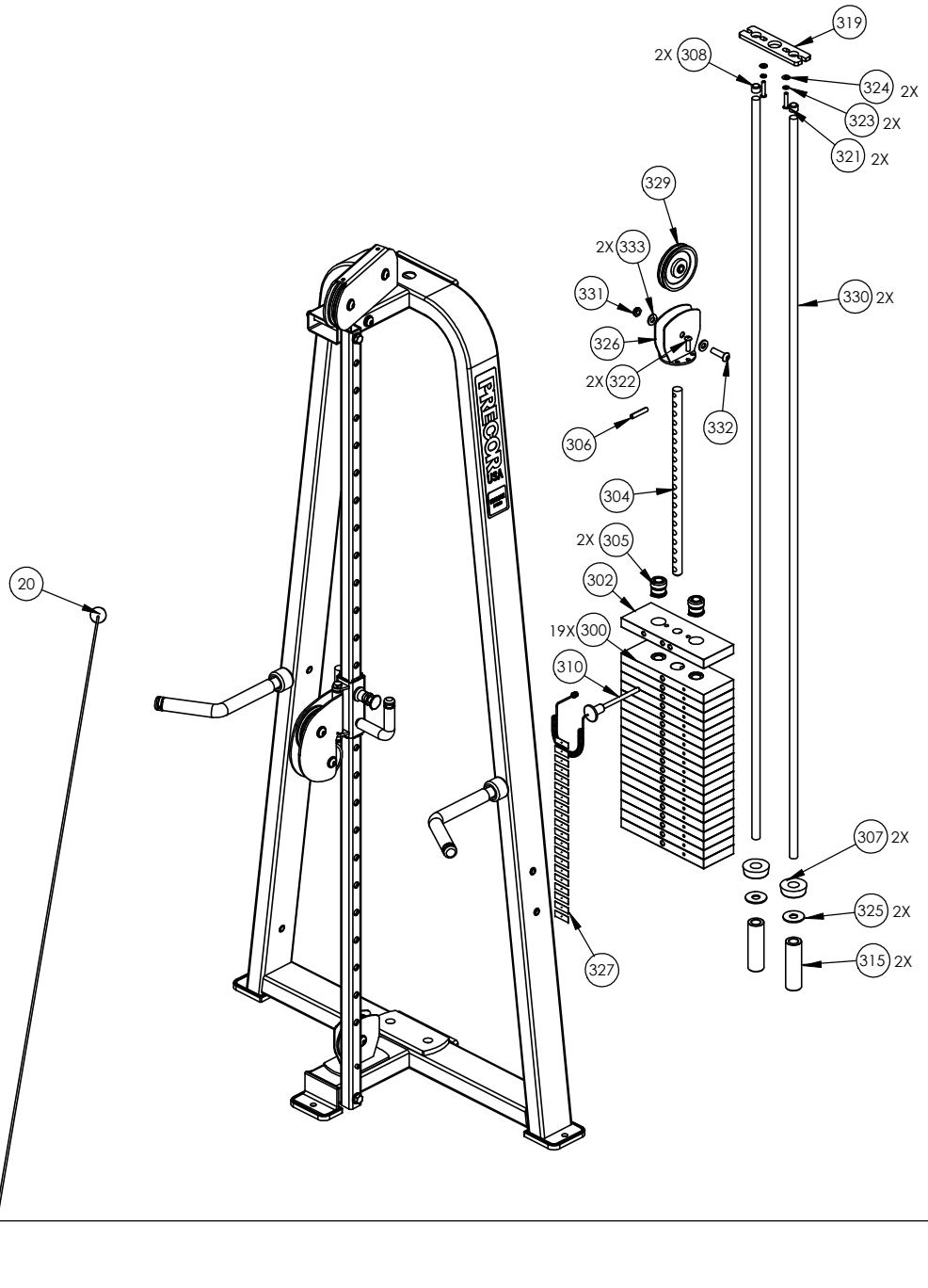

P/N: CW34920-401		SUBREV: A
DRAWN BY: VLE	DATE: 06.24.09	SHEET 3 OF 3

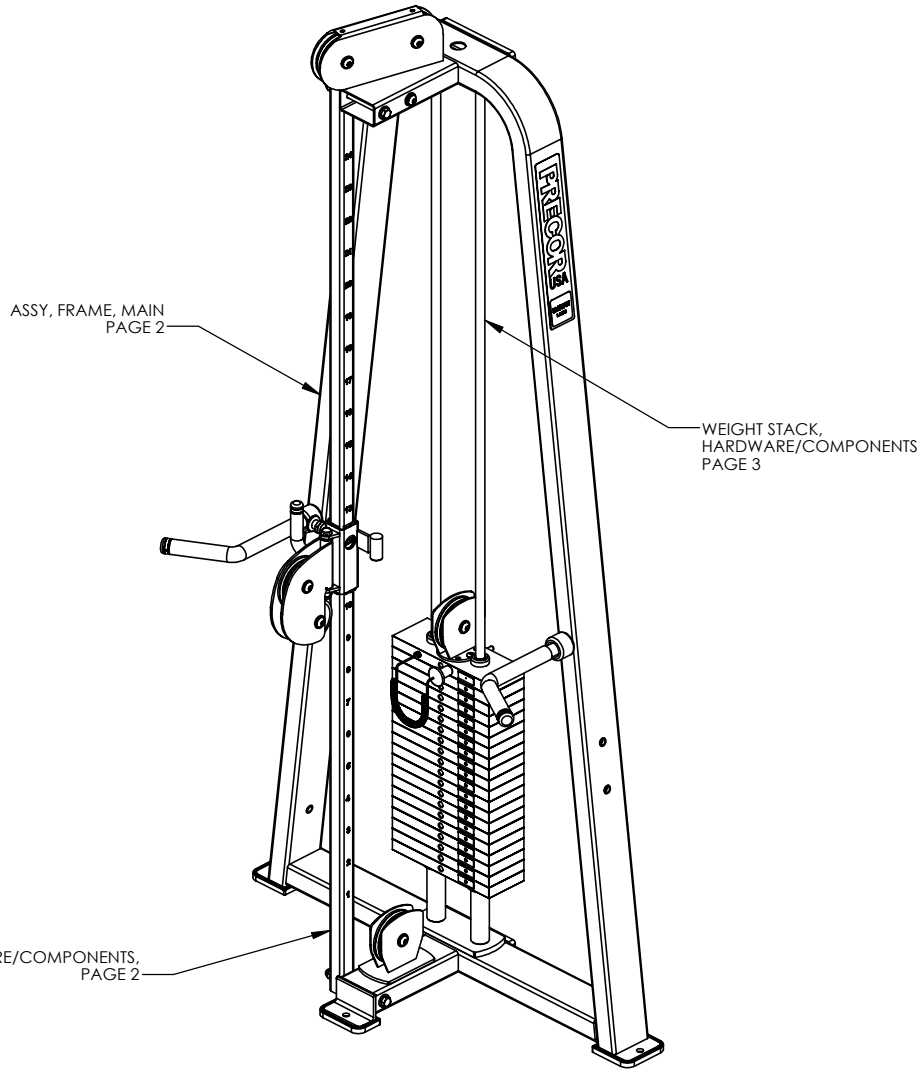

P/N: CW34921-401		SUBREV: A
DRAWN BY: VLE	DATE: 06.24.09	SHEET 1 OF 3

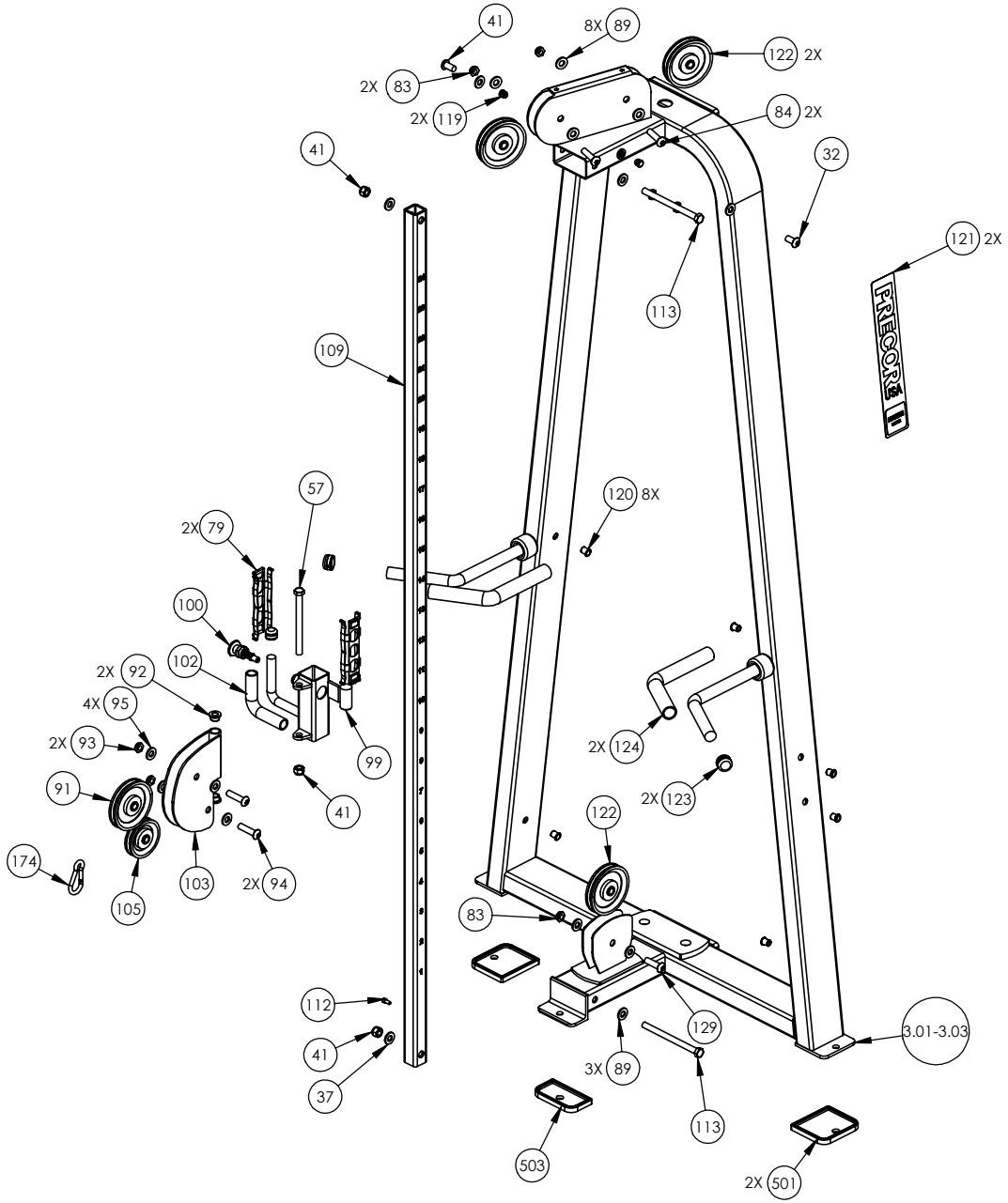

P/N: CW34921-401		SUBREV: A
DRAWN BY: VLE	DATE: 06.24.09	SHEET 2 OF 3

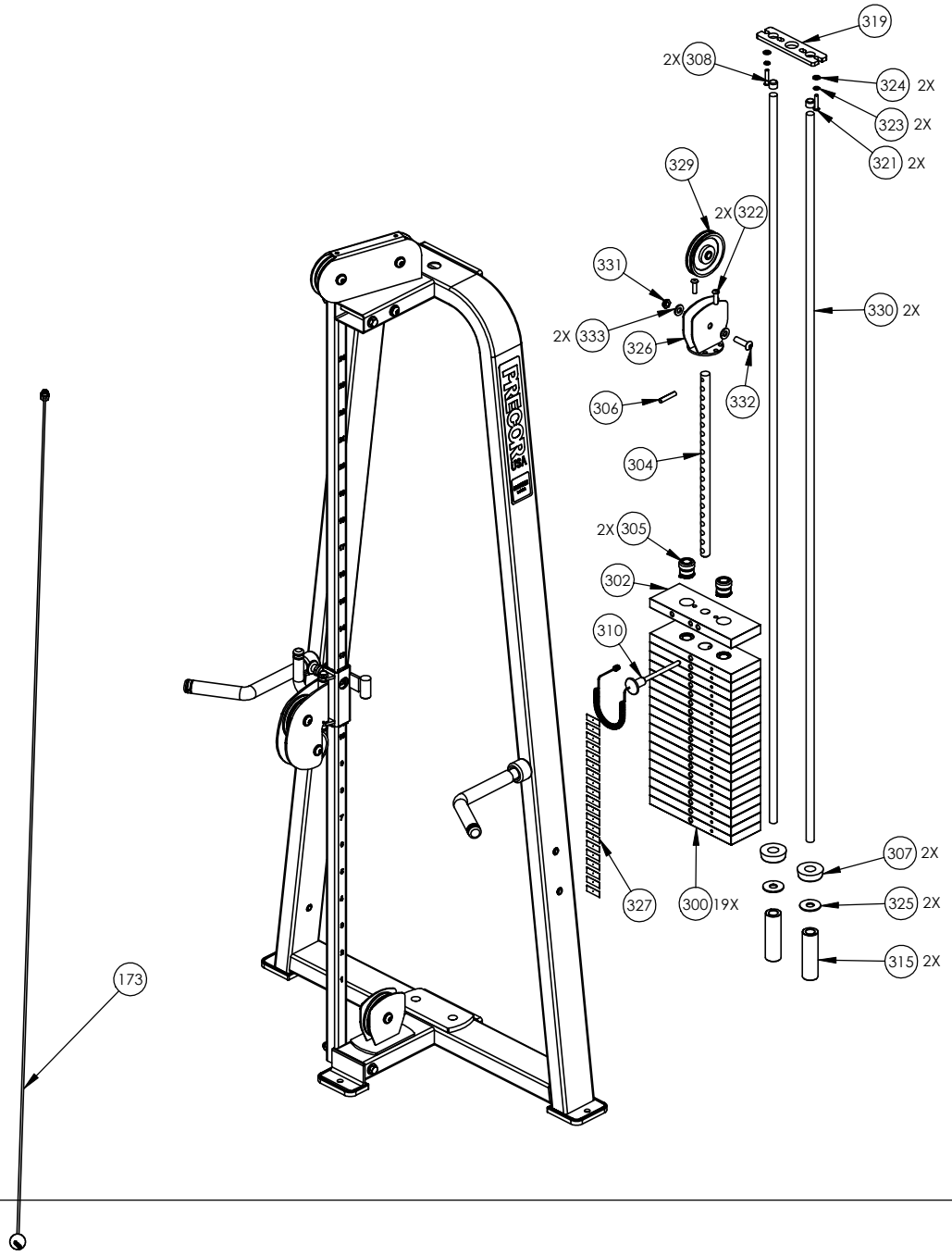

P/N: CW34921-401		SUBREV: A
DRAWN BY: VLE	DATE: 06.24.09	SHEET 3 OF 3

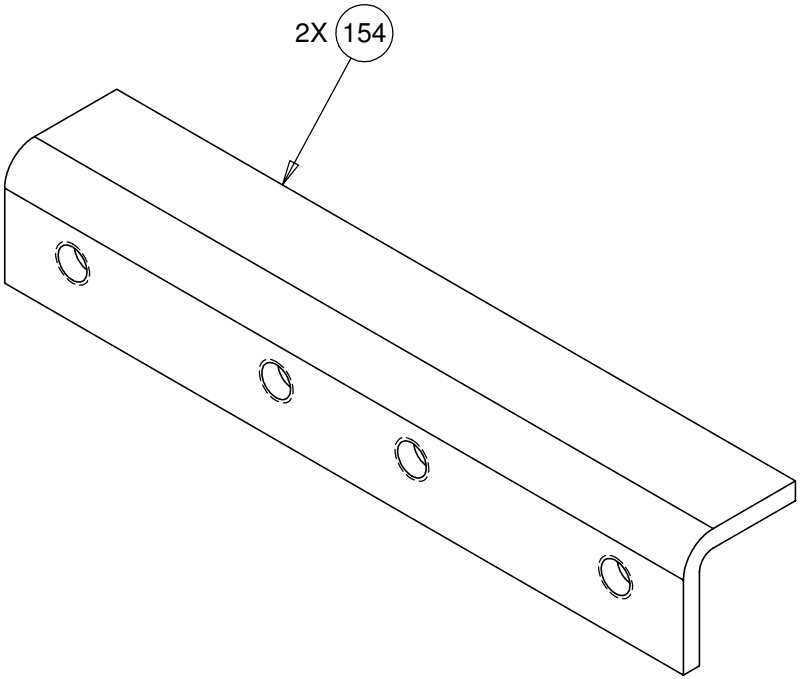

CONFIDENTIAL

THIS DOCUMENT AND INFORMATION CONTAINED HEREIN IS PROPRIETARY AND CONFIDENTIAL TO PRECOR STRENGTH INCORPORATED. RECIPIENTS OF THIS DOCUMENT AGREE THAT THIS DOCUMENT AND INFORMATION WILL NOT BE USED FOR ANY PURPOSE, REPRODUCED OR COPIED, OR DISCLOSED TO ANY THIRD PARTY, EITHER IN WHOLE OR IN PART WITHOUT PRIOR EXPRESS WRITTEN PERMISSION OF PRECOR STRENGTH INCORPORATED.

SIGN IN BLUE OR BLACK INK ONLY

DRWN BY	08.27.09	VLE
DWG CHK		
ENG	08.27.09	VLE
MFG ENG		
CS		
QA		
ID		
REG		

UNLESS OTHERWISE SPECIFIED:
DIMENSIONS ARE IN INCHES
TOLERANCES ARE:
LIN .X=±0.1 .XXX=±0.010
LIN .XX=±0.02 .XXXX=±0.0001
ANGULAR: ±1.0°
ALL DIMS AFTER PLATING
BREAK ALL SHARP EDGES
REMOVE ALL BURRS
ALL ANGLES & BENDS 90°
DWG PER ASME Y14.5M-1994
DO NOT SCALE DRAWING
125 √ ALL MACHINED SURFACES

PRECOR USA
PRECOR STRENGTH, INC.
28936 AVE WILLIAMS
VALENCIA, CA 91355
TELEPHONE: 661-362-0300

PRODUCT: STRENGTH

STEEL, CHANNEL

SIZE	PAGE OF	DWG. NO.	SUBREV
A	1 1	CW33293-402	A

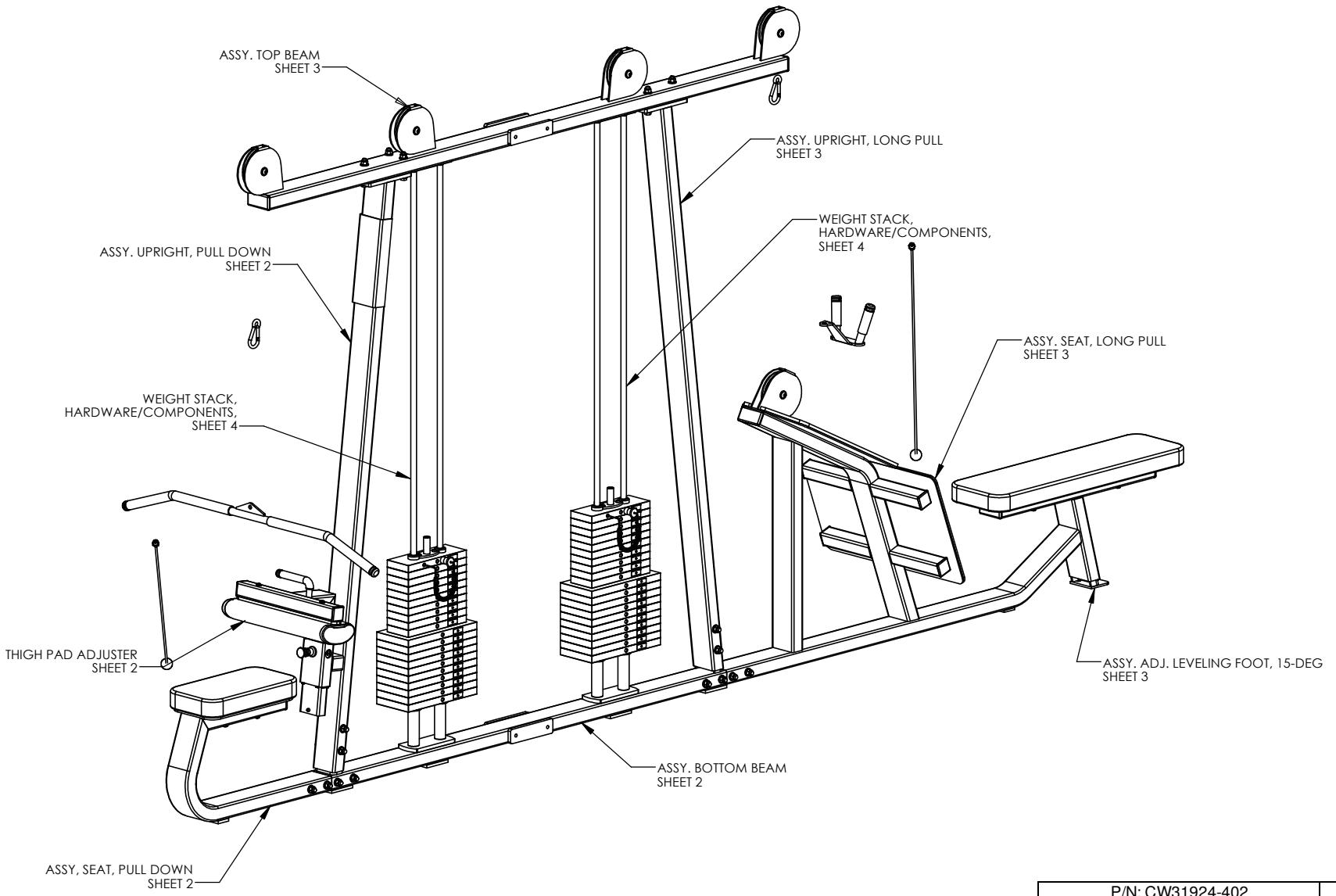

P/N: CW31924-402		SUBREV: C
DRAWN BY: JEC	DATE: 09.11.08	SHEET 1 OF 4

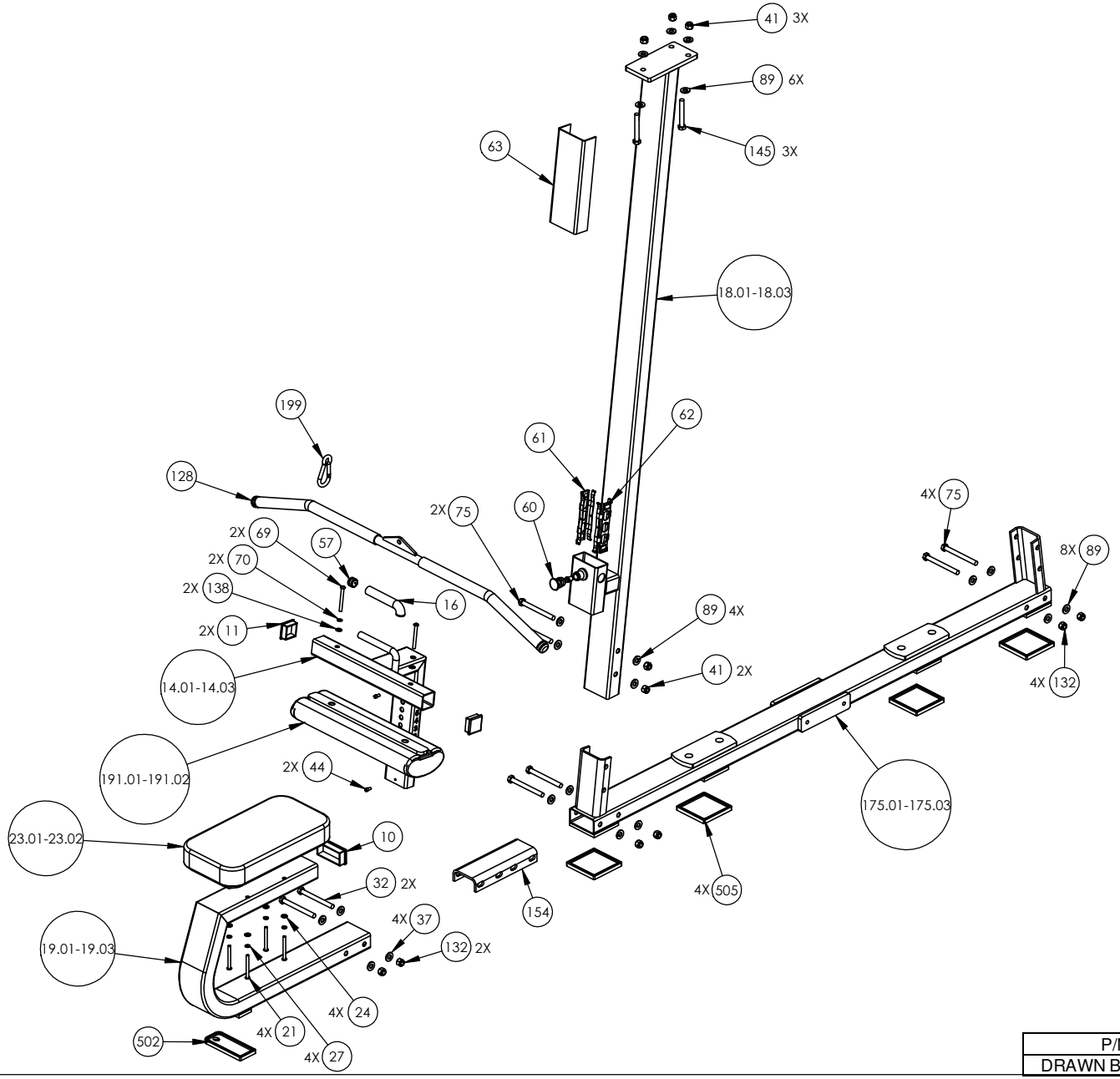

P/N: CW31924-402		SUBREV: C
DRAWN BY: JEC	DATE: 09.11.08	SHEET 2 OF 4

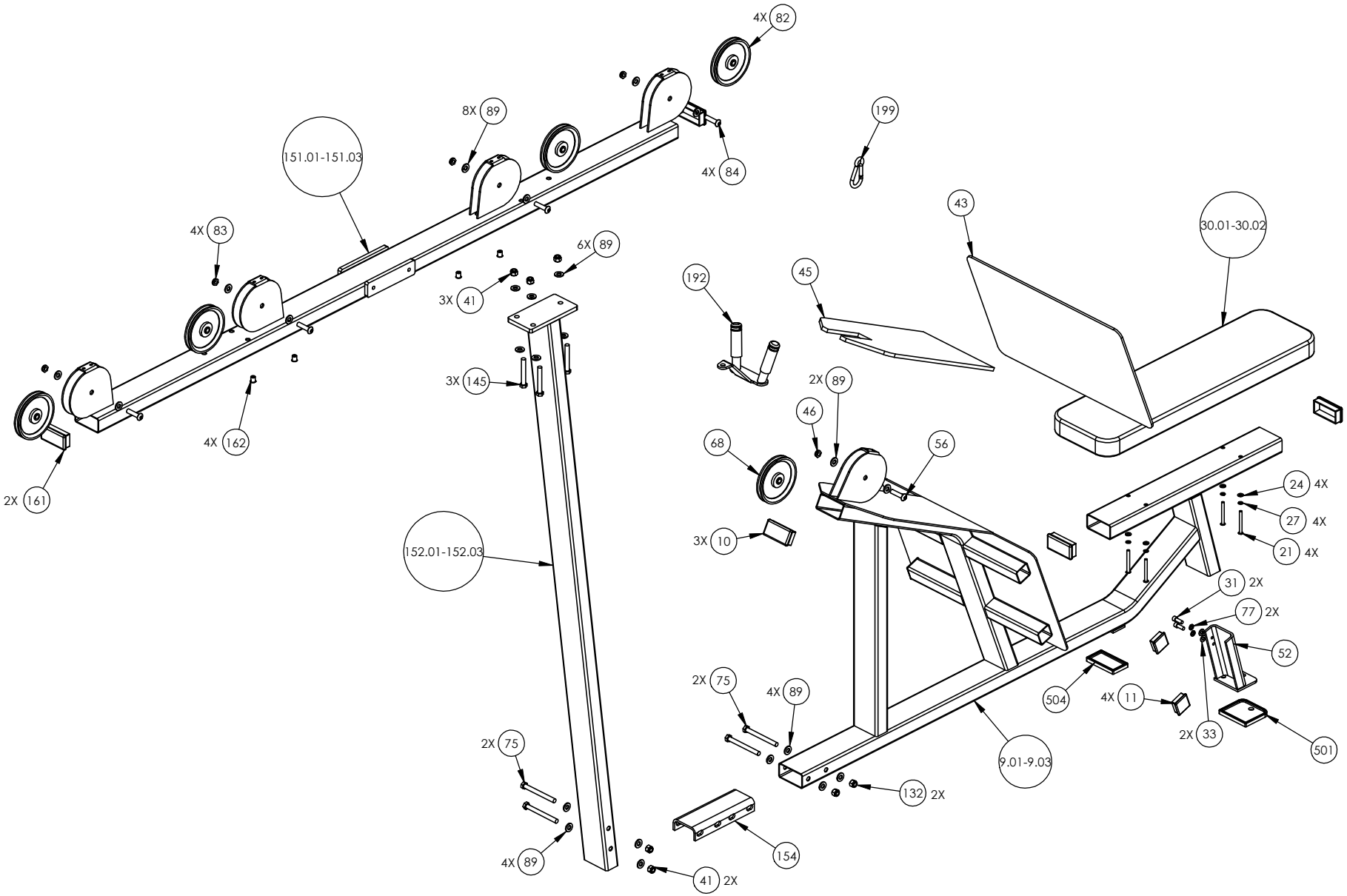

P/N: CW31924-402		SUBREV: C
DRAWN BY: JEC	DATE: 09.11.08	SHEET 3 OF 4

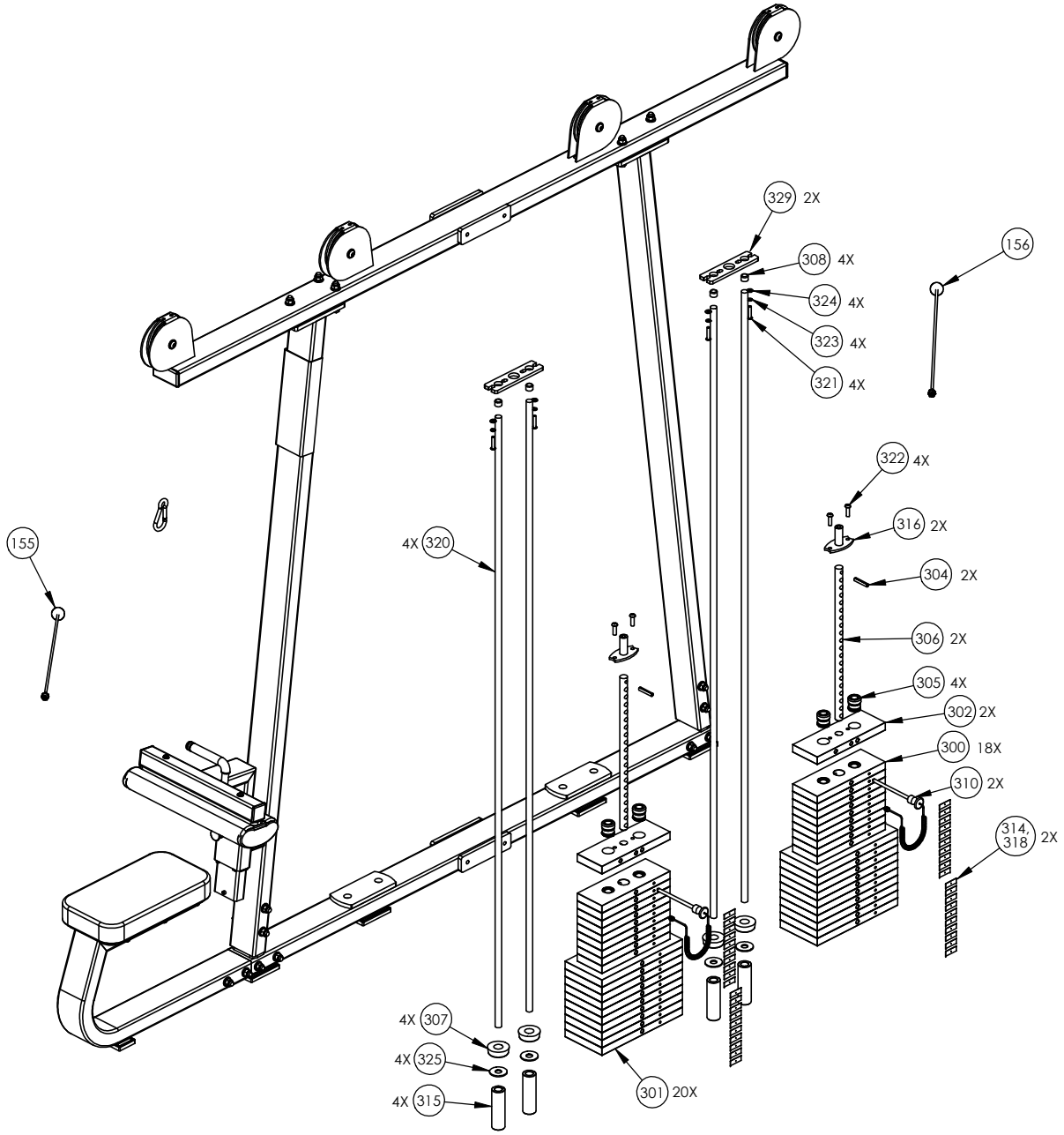

P/N: CW31924-402		SUBREV: C
DRAWN BY: JEC	DATE: 09.11.08	SHEET 4 OF 4

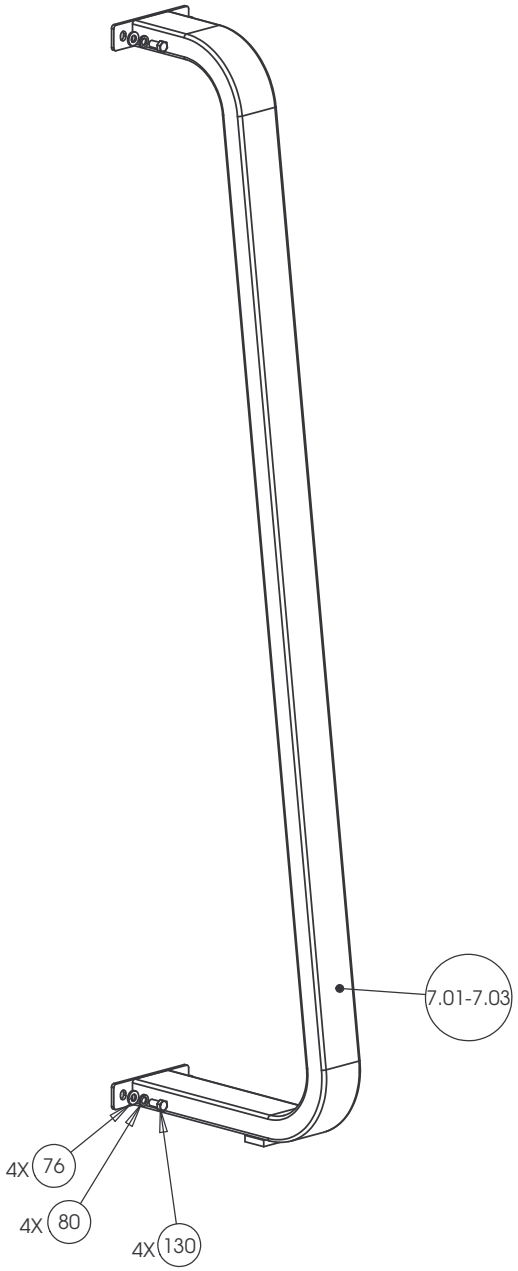

CONFIDENTIAL

THIS DOCUMENT AND INFORMATION CONTAINED HEREIN IS PROPRIETARY AND CONFIDENTIAL TO PRECOR STRENGTH INCORPORATED. RECIPIENTS OF THIS DOCUMENT AGREE THAT THIS DOCUMENT AND INFORMATION WILL NOT BE USED FOR ANY PURPOSE, REPRODUCED OR COPIED, OR DISCLOSED TO ANY THIRD PARTY, EITHER IN WHOLE OR IN PART WITHOUT PRIOR EXPRESS WRITTEN PERMISSION OF PRECOR STRENGTH, INCORPORATED.

SIGN IN BLUE OR BLACK INK ONLY		
DRWN BY	01.02.07	MGP
DWG CHK		
ENG	01.02.07	RSG
MFG ENG		
CS		
QA		
ID		
REG		

UNLESS OTHERWISE SPECIFIED:
DIMENSIONS ARE IN INCHES
TOLERANCES ARE:
LIN .X=±0.1 .XXX=±0.010
LIN .XX=±0.02 .XXXX=±0.0001
ANGULAR: ±1.0°
ALL DIMS AFTER PLATING
BREAK ALL SHARP EDGES
REMOVE ALL BURRS
ALL ANGLES & BENDS 90°
DWG PER ASME Y14.5M-1994
DO NOT SCALE DRAWING
ALL MACHINED SURFACES

PRECOR USA
PRECOR STRENGTH, INC.
28936 AVE WILLIAMS
VALENCIA, CA 91355
TELEPHONE: 661-362-0300

PRODUCT: STRENGTH

ASSEMBLY
FLANGED "C" FRAME,
W/O PULLEY HSG

SIZE	PAGE	OF	DWG. NO.	SUBREV
C	1	1	CW31898-402	A

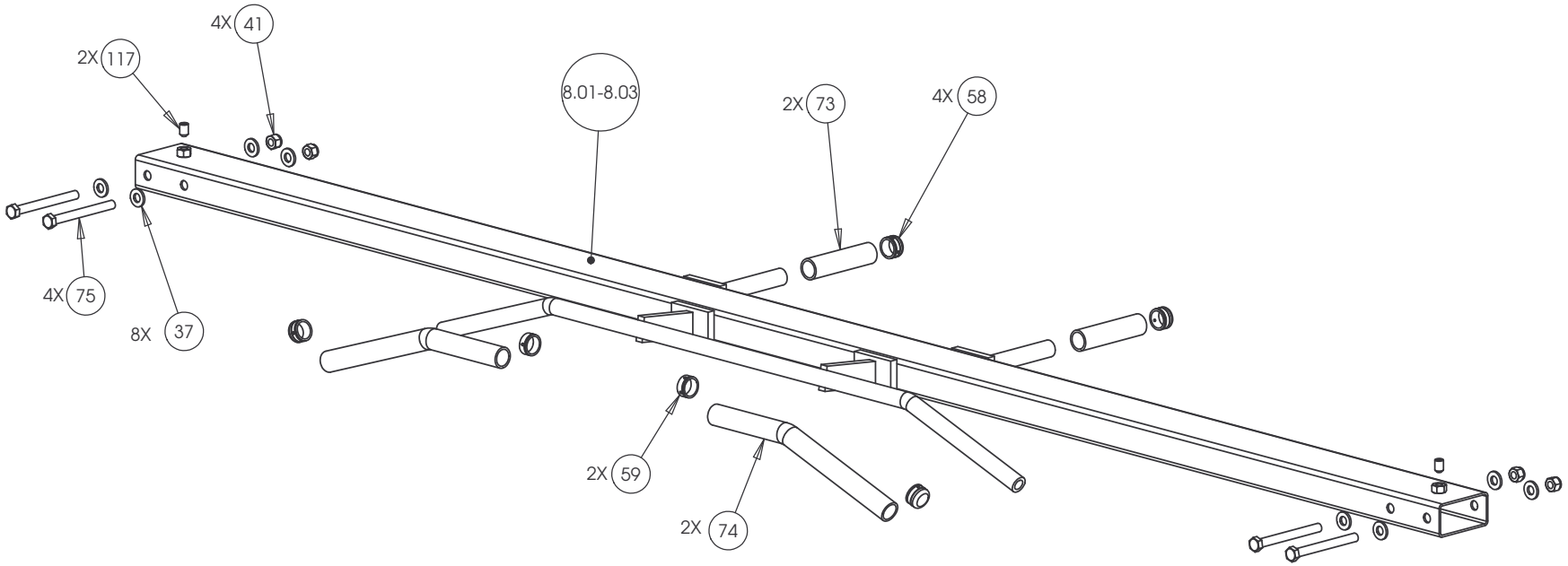

CONFIDENTIAL

THIS DOCUMENT AND INFORMATION CONTAINED HEREIN IS PROPRIETARY AND CONFIDENTIAL TO PRECOR STRENGTH INCORPORATED. RECIPIENTS OF THIS DOCUMENT AGREE THAT THIS DOCUMENT AND INFORMATION WILL NOT BE USED FOR ANY PURPOSE, REPRODUCED OR COPIED, OR DISCLOSED TO ANY THIRD PARTY, EITHER IN WHOLE OR IN PART WITHOUT PRIOR EXPRESS WRITTEN PERMISSION OF PRECOR STRENGTH, INCORPORATED.

SIGN IN BLUE OR BLACK INK ONLY		
DRWN BY	01.02.07	MGP
DWG CHK		
ENG	01.02.07	RSG
MFG ENG		
CS		
QA		
ID		
REG		

UNLESS OTHERWISE SPECIFIED:
DIMENSIONS ARE IN INCHES
TOLERANCES ARE:
LIN .X=±0.1 .XXX=±0.010
LIN .XX=±0.02 .XXXX=±0.0001
ANGULAR: ±1.0°
ALL DIMS AFTER PLATING
BREAK ALL SHARP EDGES
REMOVE ALL BURRS
ALL ANGLES & BENDS 90°
DWG PER ASME Y14.5M-1994
DO NOT SCALE DRAWING
ALL MACHINED SURFACES

PRECOR USA
PRECOR STRENGTH, INC.
28936 AVE WILLIAMS
VALENCIA, CA 91355
TELEPHONE: 661-362-0300

PRODUCT: STRENGTH

ASSEMBLY CONNECTION, 107 IN, CROSSBEAM W-HANDLES

SIZE	PAGE OF	DWG. NO.	SUBREV
C	1 1	CW31878-401	A

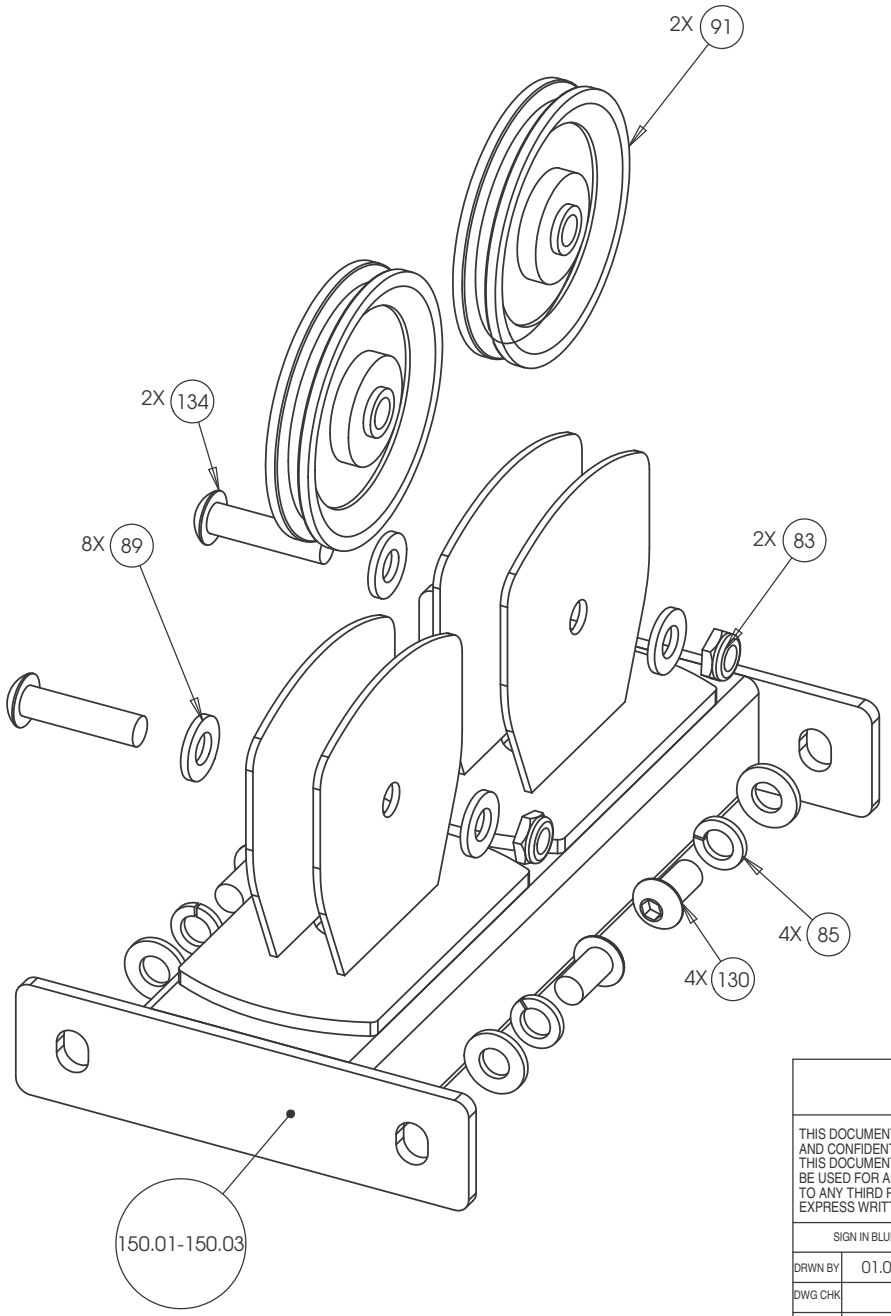

CONFIDENTIAL

THIS DOCUMENT AND INFORMATION CONTAINED HEREIN IS PROPRIETARY AND CONFIDENTIAL TO PRECOR STRENGTH INCORPORATED. RECIPIENTS OF THIS DOCUMENT AGREE THAT THIS DOCUMENT AND INFORMATION WILL NOT BE USED FOR ANY PURPOSE, REPRODUCED OR COPIED, OR DISCLOSED TO ANY THIRD PARTY, EITHER IN WHOLE OR IN PART WITHOUT PRIOR EXPRESS WRITTEN PERMISSION OF PRECOR STRENGTH, INCORPORATED.

SIGN IN BLUE OR BLACK INK ONLY		
DRWN BY	01.02.07	MGP
DWG CHK		
ENG	01.02.07	RSG
MFG ENG		
CS		
QA		
ID		
REG		

UNLESS OTHERWISE SPECIFIED:
DIMENSIONS ARE IN INCHES
TOLERANCES ARE:
LIN .X=±0.1 .XXX=±0.010
LIN .XX=±0.02 .XXXX=±0.0001
ANGULAR: ±1.0°
ALL DIMS AFTER PLATING
BREAK ALL SHARP EDGES
REMOVE ALL BURRS
ALL ANGLES & BENDS 90°
DWG PER ASME Y14.5M-1994
DO NOT SCALE DRAWING
ALL MACHINED SURFACES

PRECOR USA
PRECOR STRENGTH, INC.
28936 AVE WILLIAMS
VALENCIA, CA 91355
TELEPHONE: 661-362-0300

PRODUCT: STRENGTH

ASSEMBLY
CONNECTION, 13.75, W/
2 PULLEY HSG

SIZE	PAGE OF	DWG. NO.	SUBREV
C	1 1	CW31876-402	A

2205 Modular, Adj. Hi/Low, (3X), C-Frame

Part Number	Description	Bubble Number
PPP00000CW11311102	ENDCAP, REC TUBE, 2X4, BLK PLASTIC	10
PPP00000CW11311103	ENDCAP, REC TUBE, 2X2, BLK PLASTIC	11
PPP00000CW30641211	WELDMENT,THIGH PAD ADJUSTER, SKY WH	14.01
PPP00000CW30641301	WELDMENT,THIGH PAD ADJUSTER, CUSTOM	14.02
PPP00000CW30641321	WELDMENT,THIGH PAD ADJUSTER, TITANI	14.03
PPP0000CWGR4804500	GRIP, RUBBER, .75" OD HANDLE, 4.50"	16
PPP00000CW30639212	WELDMENT,PULLDOWN UPRIGHT, SKY WHIT	18.01
PPP00000CW30640211	WELDMENT,PULLDOWN SEAT, SKY WHITE	19.01
PPP000CWCLRA319250	ASSY, CABLE, MARINE EYES, FTS,407B	20
PPP000CWPD1105B101	PAD,9X17,4HOLES,W/BP,BLACK	23.01
PPP000CWPD1105B102	PAD,9X17,4HOLES,W/BP,RYL BL	23.02
PPP000CWPD1105B114	PAD,9X17,4HOLES,W/BP,CUSTOM	23.14
PPP000CWWBKN031007	WASHER, FLAT, TYPE A, SAE, 5/16 ID	24
PPP00CWWALYN050013	WASHER, SPLIT, 1/2 ID, BLK XYLAN	25
PPP00CWWALYN031008	WASHER, SPLIT, 5/16 ID, BL	27
PPP00000CW12589741	CARBINE, HOOK, MEDIUM, 5/16" DIA, 3	28
PPP000CWPD1102A101	PAD,FLAT,10X36,4HOLES,BLACK	30.01
PPP000CWPD1102A102	PAD,FLAT,10X36,4HOLES,RYL BL	30.02
PPP000CWPD1102A114	PAD,FLAT,10X36,4HOLES,CUSTOM	30.14
PPP000CWCAYN038100	SCREW, SOCKET HEAD, BLK XYLAN, 3/	31
PPP00CWWALYN050013	WASHER, SPLIT, 1/2 ID, BLK XYLAN	32
PPP000CWWBKN038007	WASHER, FLAT, TYPE A, SAE, 3/8 ID	33
PPP000CWTAYN050100	SCREW, BUTTON HEAD, BLK XYLAN, 1/2	37
PPP000CWWBKN050010	WASHER, FLAT, TYPE A, SAE, 1/2 ID X	37
PPP000CWKDYN050059	LOCKNUT, NYLON INSERT, FULL, UNC, 1	41
PPP00000CW30013226	CUT PIECE, CREPE, 1/4 THICK	43
PPP000CWCAYN025050	SCREW, SOCKET HEAD, BLK XYLAN	44
PPP00000CW30013131	CUT PIECE, CREPE, 1/4 THICK	45
PPP000CWKAYN050031	LOCKNUT, NYLON INSERT, HALF, UNC, 1	46
PPP000CWWBKN050010	WASHER, FLAT, TYPE A, SAE, 1/2 ID X	47
PPP000CWKAYN050031	LOCKNUT, NYLON INSERT, HALF, UNC, 1	48
PPP00CWWALYN050013	WASHER, SPLIT, 1/2 ID, BLK XYLAN	49
PPP0000CWGR4620000	GRIP, RUBBER, 1.00" OD HANDLE, 20.0	50
PPP000CWTAYN050200	SCREW, BUTTON HEAD, BLK XYLAN, 1/2	56
PPP00000CWAC220901	HANDLE END CAP W/SET SCREWS, DIA 3/	57
PPP00000CWAC218901	HANDLE END CAP W/SET SCREWS, DIA 1"	58
PPP00000CWAC219902	HNDL RETAINER RNG, W/SS,1.040" I.D.	59
PPP00000CW30165752	ASSY, POP PIN, 0.450 DIA NOSE, BLU	60
PPP0000CWAC1236104	GUIDE INSERT, PLASTIC WITH HOLE, BL	61
PPP00000CW33508101	ASSY, CUT PIECE, ABS CHANNEL,1/8 X	63
PPP0000CWAC1010101	PULLEY, 6 DIA X 1/2 ID	68
PPP00CWWALYN031008	WASHER, SPLIT, 5/16 ID, BL	70
PPP000CWTAYN050200	SCREW, BUTTON HEAD, BLK XYLAN, 1/2	71
PPP000CWWBKN050010	WASHER, FLAT, TYPE A, SAE, 1/2 ID X	72
PPP0000CWGR4605000	GRIP, RUBBER, 1.00" OD HANDLE, 5.00	73
PPP000CWHCYN050500	SCREW, HEX HEAD, BLK XYLAN, 1/2-13	75
PPP000CWWBKN050010	WASHER, FLAT, TYPE A, SAE, 1/2 ID X	76
PPP00CWWALYN038009	WASHER, SPLIT, 3/8 ID, BLK XYLAN	77
PPP000CWHCCN050600	SCREW, HEX HEAD, ZINC, 1/2-13 X 6	78

PPP00000CW33626901	GUIDE, THIN, TELESCOPING TUBE	79
PPP00CWWALYN050013	WASHER, SPLIT, 1/2 ID, BLK XYLAN	80
PPP0000CWAC1010101	PULLEY, 6 DIA X 1/2 ID	82
PPP000CWKAYN050031	LOCKNUT, NYLON INSERT, HALF, UNC, 1	83
PPP000CWTAYN050200	SCREW, BUTTON HEAD, BLK XYLAN, 1/2	84
PPP00CWWALYN050013	WASHER, SPLIT, 1/2 ID, BLK XYLAN	85
PPP00CWWALYN031008	WASHER, SPLIT, 5/16 ID, BL	87
PPP000CWWBKN031007	WASHER, FLAT, TYPE A, SAE, 5/16 ID	88
PPP000CWWBKN050010	WASHER, FLAT, TYPE A, SAE, 1/2 ID X	89
PPP0000CWAC1009101	PULLEY, 4 1/2 DIA X 1/2 ID	91
PPP00000CW10433108	BUSHING,FLNGD,.75ODX.5IDX.5,IGUS R	92
PPP000CWKAYN050031	LOCKNUT, NYLON INSERT, HALF, UNC, 1	93
PPP000CWTAYN050200	SCREW, BUTTON HEAD, BLK XYLAN, 1/2	94
PPP000CWWBKN050010	WASHER, FLAT, TYPE A, SAE, 1/2 ID X	95
PPP00000CWAC218901	HANDLE END CAP W/SET SCREWS, DIA 1"	96
PPP00000CW30165752	ASSY, POP PIN, 0.450 DIA NOSE, BLU	100
PPP00000CWAC220901	HANDLE END CAP W/SET SCREWS, DIA 3/	101
PPP0000CWGR4806000	GRIP, RUBBER, .75" OD HANDLE, 6.00"	102
PPP00000CW30497721	WELDMENT, W/2 PULLEY WHEELS, WRKL B	103
PPP0000CWAC1008101	PULLEY, 3 1/2 DIA. X 1/2 ID	105
PPP0000CWPF4020713	TUBE,STEEL,HRPO, 1 1/2 X 1 1/2 X 3/	109
PPP000CWCAYN025050	SCREW, SOCKET HEAD, BLK XYLAN	112
PPP000CWHCCN050600	SCREW, HEX HEAD, ZINC, 1/2-13 X 6	113
PPP00000CW35150101	ASSY, D- HANDLE	114
PPP000CWTAYN031100	SCREW, BUTTON HEAD, BLK XYLAN, 5/16	114
PPP000CWEANN050075	SCREW, SET, SCKT, CUP POINT, 1/2-13	117
PPP00000CW11311102	ENDCAP, REC TUBE, 2X4, BLK PLASTIC	118
PPP00000CW11382105	CAP, TUBE, PLASTIC, ROUND, CCF-5/8-	119
PPP00000CW12537109	NUT,INSERT,THIN-NUT,LARGE FLANGE	120
PPP00000CW31756101	LABEL, PRECOR USA ICARIAN LINE	121
PPP0000CWAC1009101	PULLEY, 4 1/2 DIA X 1/2 ID	122
PPP00000CWAC218901	HANDLE END CAP W/SET SCREWS, DIA 1"	123
PPP0000CWAC4003101	ACCESSORY, PRO STYLE BAR, SOLID, 32	125
PPP0000CWAC4011101	ACCESSORY, HANDLE , NYLON ROPE W/BA	126
PPP0000CWAC4013101	ACCESSORY, LAT BAR , SOLID, 48"	127
PPP0000CWSA1081731	ASSY,LAT BAR,BLK ZNC	128
PPP000CWTAYN050100	SCREW, BUTTON HEAD, BLK XYLAN, 1/2	130
PPP000CWHCYN050275	SCREW, HEX HEAD, BLK XYLAN, 1/2-13	131
PPP000CWTAYN050200	SCREW, BUTTON HEAD, BLK XYLAN, 1/2	134
PPP000CWWBKN031007	WASHER, FLAT, TYPE A, SAE, 5/16 ID	138
PPP000CWHCYN050350	SCREW, HEX HEAD, BLK XYLAN, 1/2-13	145
PPP00000CW31877212	WELDMENT, CONNECTION, 13.75, W/2 PU	150.01
PPP00000CW31877302	WELDMENT, CONNECTION, 13.75, W/2 PU	150.02
PPP00000CW31877322	WELDMENT, CONNECTION, 13.75, W/2 PU	150.03
PPP00000CW31887212	WELDMENT, TOP BEAM, SKY WHITE	151.01
PPP00000CW31887302	WELDMENT, TOP BEAM, CUSTOM	151.02
PPP00000CW31887322	WELDMENT, TOP BEAM, TITANIUM	151.03
PPP00000CW31891211	WELDMENT, UPRIGHT, LONG PULL, SKY W	152.01
PPP00000CW31891301	WELDMENT, UPRIGHT, LONG PULL, CUSTO	152.02
PPP00000CW31891321	WELDMENT, UPRIGHT, LONG PULL, TITAN	152.03
PPP00000CW33293733	STEEL, ANGLE, HR, [3.15 X .25 X 1.6	154

PPP000CWCLGY101125	ASSY, CABLE, MARINE EYES, 304SM	155
PPP000CWCLGY155750	ASSY, CABLE, MARINE EYES, 302M	156
PPP00000CW11311102	ENDCAP, REC TUBE, 2X4, BLK PLASTIC	161
PPP00000CW12537109	NUT,INSERT,THIN-NUT,LARGE FLANGE	162
PPP000CWCLRA319250	ASSY, CABLE, MARINE EYES, FTS,407B	173
PPP00000CW12589741	CARBINE, HOOK, MEDIUM, 5/16" DIA, 3	174
PPP00000CW33302211	WELDMENT, BOTTOM BEAM, SKY WHITE	175.01
PPP00000CW33302301	WELDMENT, BOTTOM BEAM, CUSTOM	175.02
PPP00000CW33302321	WELDMENT, BOTTOM BEAM, TITANIUM, HG	175.03
PPP00000CW30010102	LABEL,WARNING STRENGTH	188
PPP00000CW30011102	LABEL,WARNING WEIGHT STACK	189
PPP000CWPD1141J101	PAD,4X19,2HOLES,W/BP,BLACK, W/SLIP	191.01
PPP000CWPD1141J102	PAD,4X19,2HOLES,W/BP,RYL BL, W/SLIP	191.02
PPP000CWPD1141J114	PAD,4X19,2HOLES,W/BP,CUSTOM,W/SLIP	191.14
PPP00000CW31595731	HANDLE, NARROW GRIP ROW, BLACK ZINC	192
PPP00000CW31597731	HANDLE, WIDE GRIP ROW, BLACK ZINC	193
PPP0000CWAC4020101	ACCESSORY, HANDLE , DOUBLE D, SOLID	194
PPP00000CW12589742	CARBINE, HOOK, LARGE, 3/8" DIA, 3 1	199
PPP0000CWAC1133101	BUSHING, WEIGHT PLATE, LDPE PLASTIC	203
PPP00000CW10519721	PLATE, WEIGHT, 20 LBS, WRKL BLK	279
PPP00000CW10510721	ASSY, PLATE, WEIGHT, 10 LBS, WRKL B	300
PPP00000CW10520721	ASSY, PLATE, WEIGHT, 20 LBS, WRKL B	301
PPP00000CW30132712	SELECTOR STEM, 20 PLATE,0.875 DIA,	304
PPP00000CW30184902	ASSY,BARREL,TOP PLATE,ALUMINUM	305
PPP000CWLDNN038200	SLOTTED PIN SPRING, DIA 3/8 X 2	306
PPP00000CW12402101	BUMPER, ID 1.050, BLK RUBBER	307
PPP00000CW12404101	CAP, GUIDE ROD,DIA 3/4, BLK	308
PPP00000CW33870102	ASSEMBLY, 5" WEIGHT STACK PIN & LEA	310
PPP00000CW32937101	WEIGHT STACK LABELS, 10-250, STAGGE	314
PPP00000CW33323721	STACK RISER, 5 INCH, WRINKLE BLACK	315
PPP00000CW32663741	WELDMENT, BOLT ON TOP PLATE MINI ST	316
PPP00000CW32938101	WEIGHT STACK LABELS, 10-300, STAGGE	318
PPP0000CWPF1016101	UHMWPE, GUIDE ROD CAPTURE PLATE	319
PPP0000CWPF1218712	GUIDE ROD,DIA 3/4, #8,CHM	320
PPP000CWTAYN031175	SCREW, BUTTON HEAD, BLK XYLAN, 5/16	321
PPP000CWTAYN038125	SCREW, BUTTON HEAD, BLK XYLAN, 3/8	322
PPP00CWWALYN031008	WASHER, SPLIT, 5/16 ID, BL	323
PPP000CWWBKN031007	WASHER, FLAT, TYPE A, SAE, 5/16 ID	324
PPP000CWWCKN075015	WASHER, FLAT, TYPE A, WIDE, 3/4 ID	325
PPP00000CW32651721	WELDMENT, 4.50" TOP PLATE PULLEY HO	326
PPP0000CWAC1009101	PULLEY, 4 1/2 DIA X 1/2 ID	329
PPP000CWKAYN050031	LOCKNUT, NYLON INSERT, HALF, UNC, 1	331
PPP000CWTAYN050175	SCREW, BUTTON HEAD, BLK XYLAN, 1/2	332
PPP000CWWBKN050010	WASHER, FLAT, TYPE A, SAE, 1/2 ID X	333
PPP0000CWAC1177101	FLOOR PROTECTOR, RUBBER, 4.563 X 4.	501
PPP0000CWAC1178101	FLOOR PROTECTOR, RUBBER, 2.563 X 6.	502
PPP0000CWAC1179101	FLOOR PROTECTOR, RUBBER, 4.813 X 2.	503
PPP0000CWAC1180101	FLOOR PROTECTOR, RUBBER, 2.563 X 4.	504
PPP0000CWAC1181101	FLOOR PROTECTOR, RUBBER, 4.563 X 4.	505
PPP00000CW58004101	WEIGHT STACK BUSHING KIT, KS SERIES	600